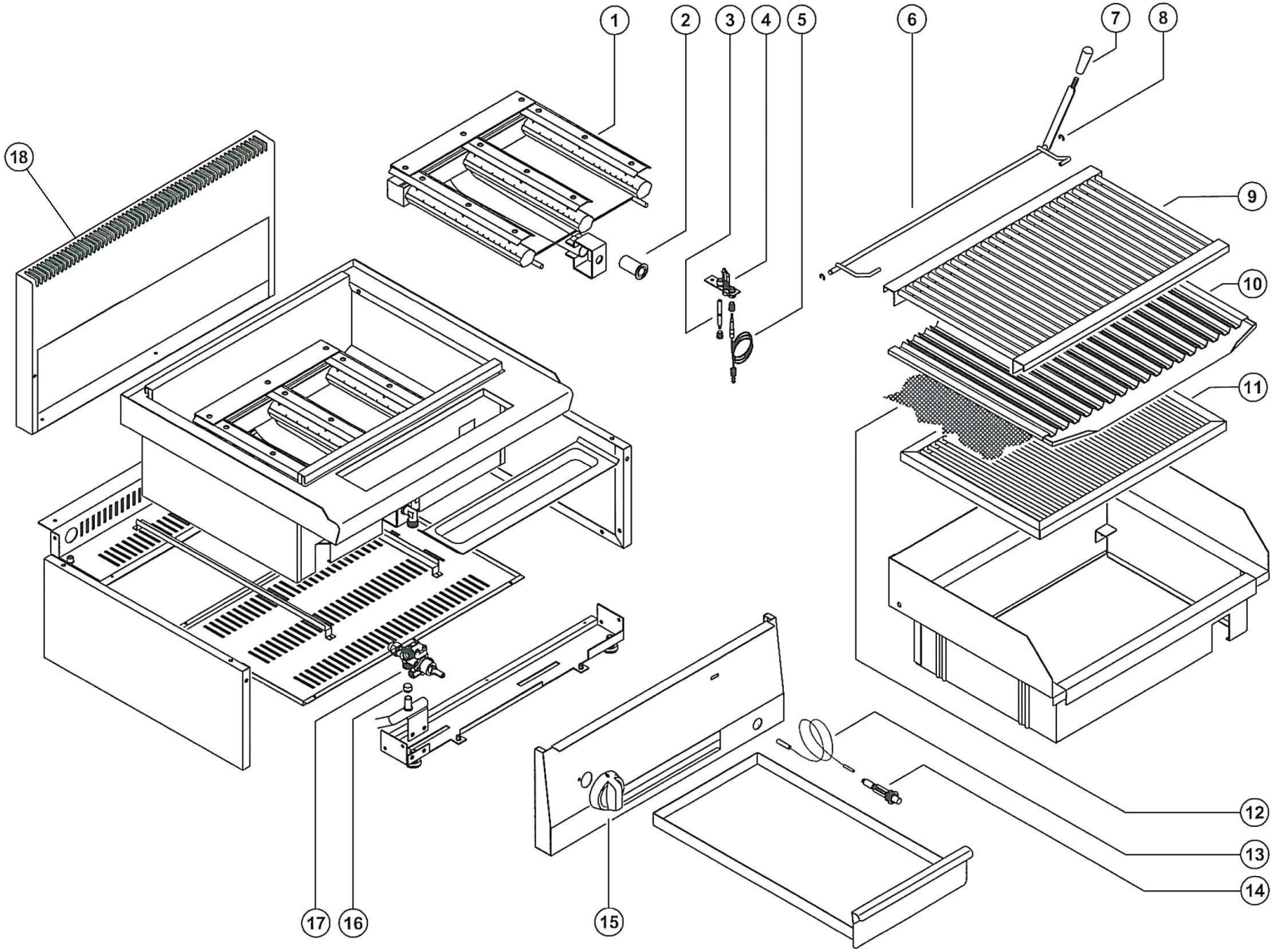


| | | | |
|---|---|---|---|
| Bartscher | Lavasteingrill, Gas, 600, B600<br>Artikel-Nr.: 1317003 | Explosionszeichnung<br>05.05.2017 | Seite 1/2 |

| Pos. | Artikelbeschreibung | Description of item | Artikel Nr./Item No. |
|---|---|---|---|
| 1 | Brenner | Burner | 02109150 |
| 2 | Buchse f. Primärluft | Socket f. primary air | n.m.lieferbar/n.m.available |
| 3 | Zündkerze | Ignition plug | 06010061 |
| 4 | Pilotbrenner m. Zünddüsen | Pilot burner w. ignition burner | 07090026 |
| 5 | Thermoelement 800 mm | Thermocouple 800 mm | 01916000 |
| 6 | Hebevorrichtung | Lifting unit | 02009127 |
| 7 | Griff | Handle | 05900149 |
| 8 | Sicherungsring | Locking ring | 05930101 |
| 9 | Grillrost f. Fisch, Edelstahl | Bar grid for fish, stainless steel | 02009144 |
| 10 | Grillrost f. Fleisch, Edelstahl | Grill grid f. meat, stainless steel | 02009142 |
| 11 | Gitter f. Lavasteine | Grid f. lava rock | 02009135 |
| 12 | Lavasteine 7Kg | Lava rock 7kg | 100611 |
| 13 | Zündkabel | Ignition cable | 06050610 |
| 14 | Piezozünder | Piezo igniter | 017959 |
| 15 | Knebel f. Gashahn | Knob f. gas tap | 02008671 |
| 16 | Doppelkegelring D 12 mm | Double taper seal D 12 mm | 024684 |
| 17 | Gashahn | Gas tap | 010909 |
| 18 | Kamin komplett | Chimney complete | 049990 |
| o.Abb/n.pic | Düse, Propan, D 120 | Nozzle, propane, D 120 | 07042798 |
| | Düse, Erdgas H, D 205 | Nozzle, natural gas H, D 205 | 07042754 |
| | Düse, Erdgas L, D 240 | Nozzle, natural gas L, D 240 | 07042801 |
| | Zünddüse, Propan, D 16 | Ignition nozzle, propane, D 16 | 016136 |
| | Zünddüse, Erdgas, D 27 | Ignition nozzle, natural gas, D 27 | 016137 |
| | Düsensatz, Propan 37mbar f. FR | Nozzle set, propane 37mbar f. FR | 07043702 |
| | Düse 30mbar, Propangas, 135K FR | Nozzle 30mbar, propane gas, 135K FR | E07042753 |