MODULAR PROFESSIONAL

MOD. 65/40 GRG
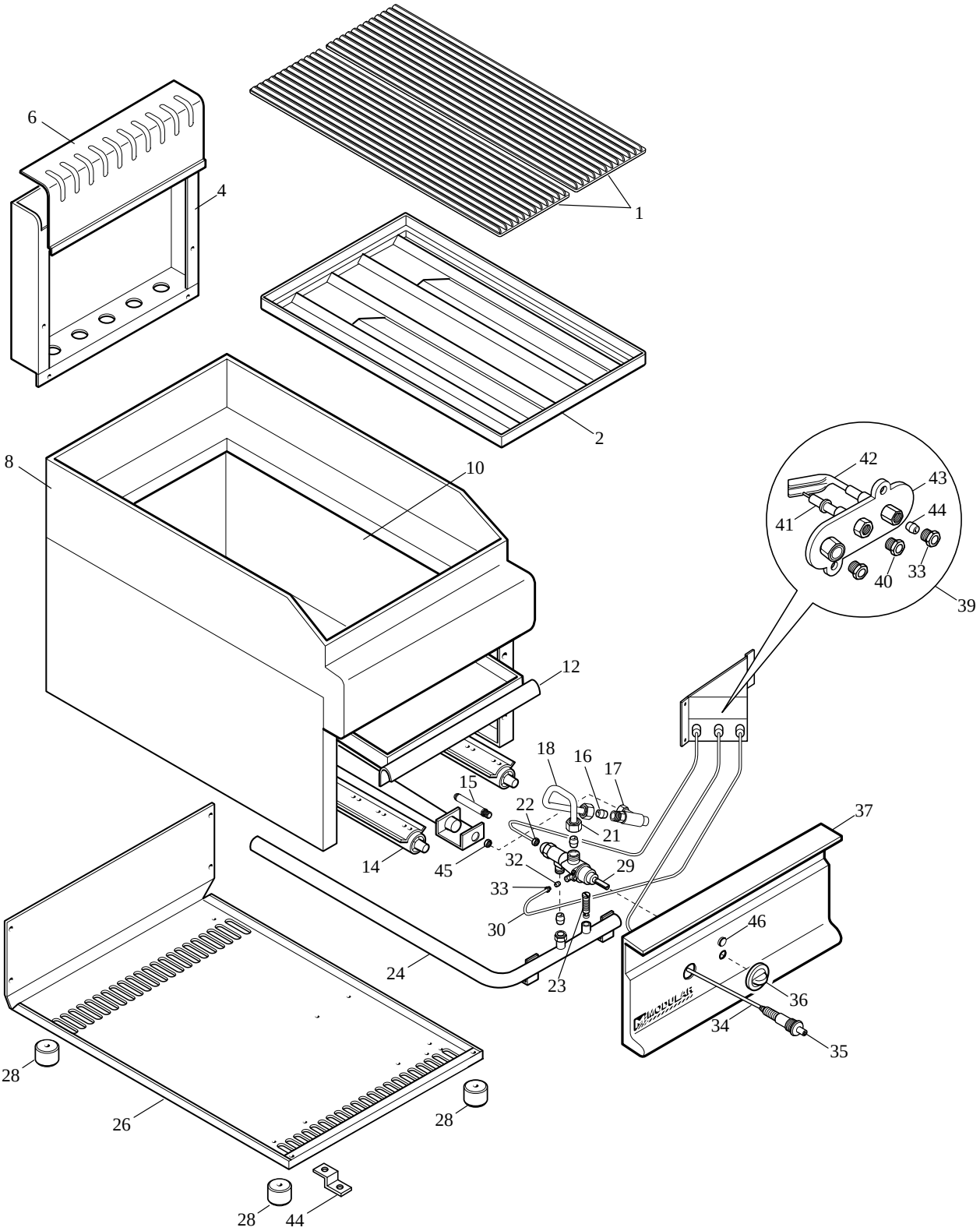
ED. 01-99
TAV. 253.050.00